DATE Jan 19, 2012	OUTLINE DIMENSIONS 3-PHASE INDUCTION MOTOR	MODEL TYPE: AETHCF
CATALOG NO. GHV0/72C		FRAME NO. 56C

Pole	HP	KW	Hz	VOLT	Syn. Speed R.P.M
2	3/4	.56	60	230/460	3600

Ins.	Rating	Dimensions in	Approx Weight	Bearings
F	CONT.	inch	29 lbs.	DF: 6204ZZ NDE: 6203ZZ

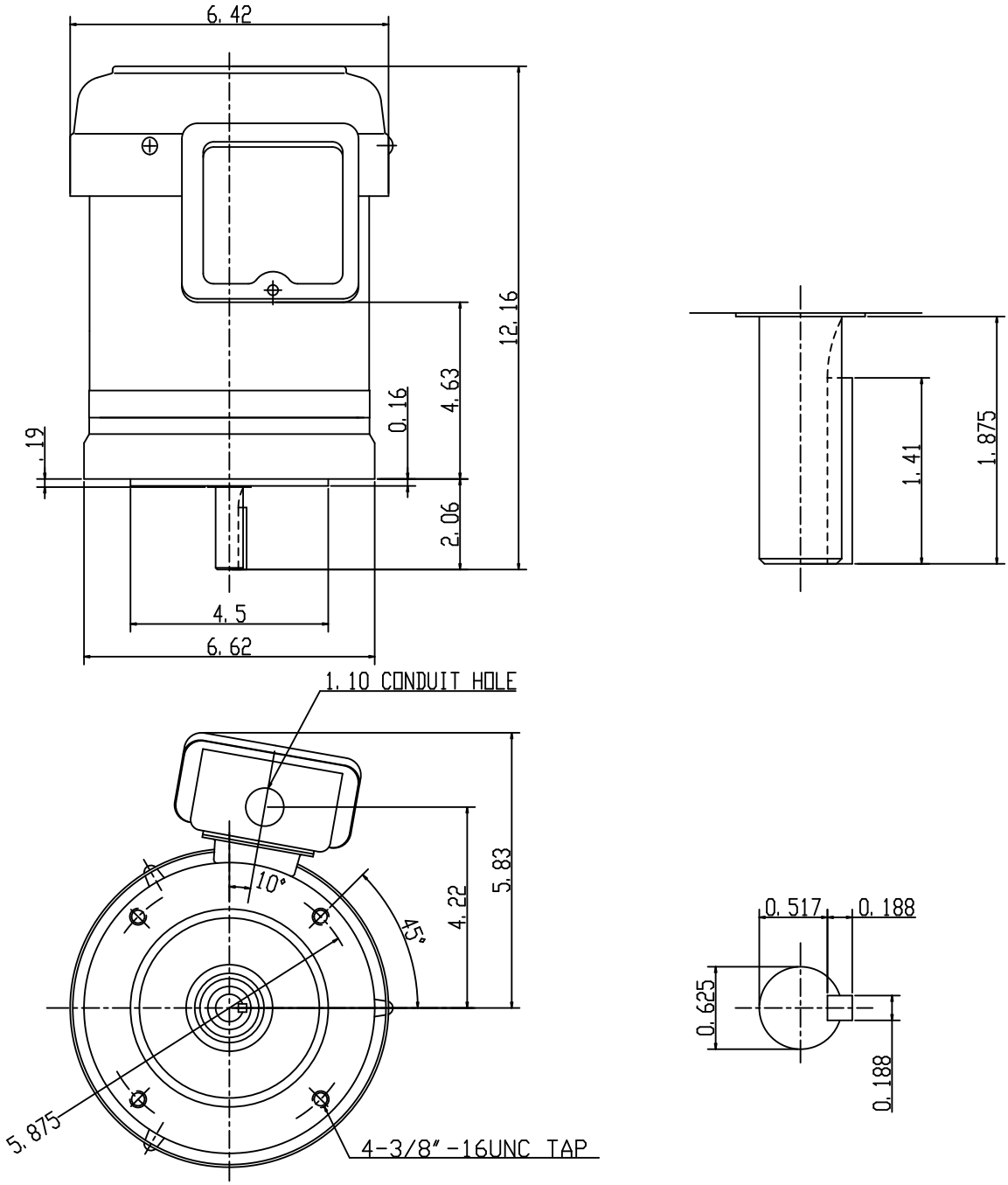

APPD.	W.H.TSAI	03 31 03	TECO Westinghouse	DWG NO. 31049Z105 0716
CHKD.	J.B.CHEN	03 31 03		
DWN.	P.J.CHEN	03 31 03		